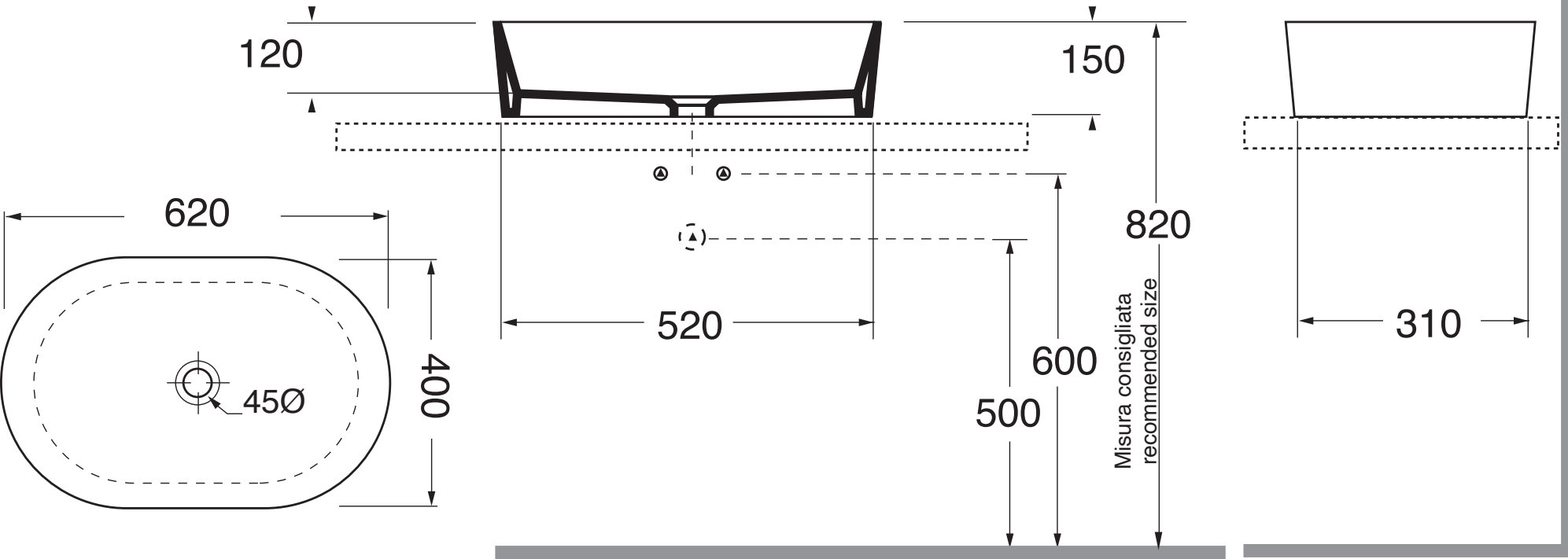
120
150
820
620
520
600
500
400
45Ø
310
Misura consigliata
recommended size